PREPARATION

BASIC Cutting directions to use the Easy Star and Geese Ruler to make perfect HST's
You'll need to use the ***Easy Star and Geese Ruler by Kimberly Einmo*** for this step. Before cutting all your strips into units, cut one sample unit, then sew and press seam toward darker fabric. The unit should measure 3½" square unfinished. If it doesn't, measure the correct strip size, cut another unit, and try again. Be sure to use a scant ¼" seam allowance. Press all HST seam allowances toward the darker fabric or as shown in the diagrams.

- Place fabric strips RST (right sides together). If you are right handed, the length of your strips will be to the right. If you are left handed, the directions are opposite.
- Use Side B (mint green side) of ruler and line up the ruler along the bottom edge of your strips according to the size of the cut strip width.
- Cut HST's from fabric strips. These are **HALF SQUARE TRIANGLES. T**he units are ready to be sewn.
- Rotate your ruler 180 degrees and line up along the last cut edge to make the next cut, working your way down the fabric strip unit. You will only use SIDE B to make HST's – so you should always be able to read the words in mint green.

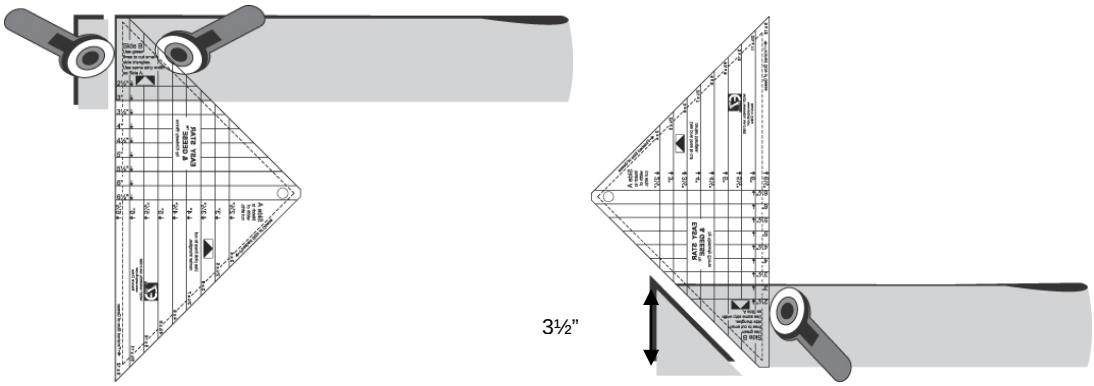

STEP 1

- Lightly press a 3½" - #2 / #3 strip RST to make them cling to each other.
- Repeat using #2 / #3 strips so you have a total of 5 - #2 / #3 strip units.
- Use the ***Easy Star and Geese Ruler*** to cut 3½" triangle units for a total of 80 HST's
- Chain stitch these units together using a scant ¼" seam; sew along the long edge of triangles. ***Be careful not to pull or distort the bias edges of the triangles when sewing the seams!***
- Press triangle units CLOSED, then press seams of HST's toward fabric #3. They should measure 3½" x 3½" unfinished. Square-up each half-square triangle unit if necessary. If you have cut and sewn carefully, you shouldn't need to square-up the units!

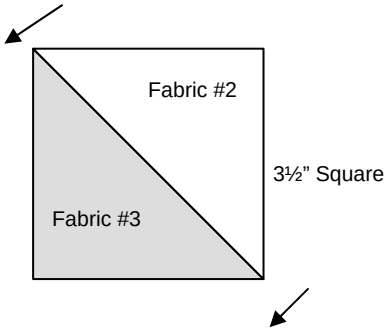

Copyright Library of Congress 2008

STEP 1A

- Repeat process using a 3½" fabric #2 and #6 strip RST.
- You should have a total of 4 - #2 and #6 strip units.
- Using the **Easy Star and Geese Ruler,** cut 3½" triangles for a total of 64 HST's.
- Sew and press these HST's as in the illustration above.

STEP 1B

- Repeat process using a 3½" fabric #2 and #7 strip RST.
- Repeat so you have a total of 3 - #2 and #7 strip units.
- Using the **Easy Star and Geese Ruler,** cut 3½" triangles for a total of 36 HST's.
- Sew and press these HST's as in the illustration above.

See you next Friday to download the second clue!