Easy Sawtooth Stars and Flying Geese

Featuring the Easy Star and Geese Ruler by Kimberly Einmo

(No Math, No Wasted Fabric, No Stress!)

Quilt Size: 42” x 42” / Finished Block Size: 10” x 10”

FABRIC REQUIREMENTS *(Cut all strips selvage to selvage)*

FABRIC	YARDS	CUTTING INSTRUCTIONS
Fabric #1 Multi-color (Print)	5/8 yd.	• Cut 4 – 5” strips for outer border
Fabric #2 Dark (Red)	5/8 yd.	• Cut 1 – 5½” strips. Cut 5 D squares. • Cut 4 – 3” strips. Cut 72 B wing units.
Fabric #3 Light (Light Background)	5/8 yd.	• 6 – 3” strips. Cut 20 C squares, 20 A geese units, and 8 E rectangles.
Fabric #4 Medium (Yellow)	1/8 yd.	• Cut 1 – 3” strip. Cut 4 A geese units.
Fabric #5 Medium (Coral)	1/8 yd.	• Cut 1 – 3” strip. Cut 4 A geese units.
Fabric #6 Medium (Orange)	1/8 yd.	• Cut 1 – 3” strip. Cut 4 A geese units.
Fabric #7 Medium (Green)	1/8 yd.	• Cut 1 – 3” strip. Cut 4 A geese units.
Fabric #8 Medium Dark (Multi)	5/8 yd.	• Cut 4 – 1½” strips for inner border • Cut 5 – 2¼” strips for binding
Backing	1¼ yd.	1 panel 44” x 44”
Batting	---	44” x 44”

ROTARY CUTTING (*Measurements include seam allowances) RST – Right Sides Together*

PATCH	MEASUREMENT
A	Use 3” strip and cut Geese (center triangle units) from Side A of Ruler
B	Use 3” strip folded RST and cut Wing (small side triangle units) from Side B of Ruler
C	3” x 3” square
D	5½” x 5½” square
E	3” x 10½” rectangle

Block Assembly

Cut the patches listed in the Fabric Requirements table. The Rotary Cutting table provides the measurements for each patch.

Side A

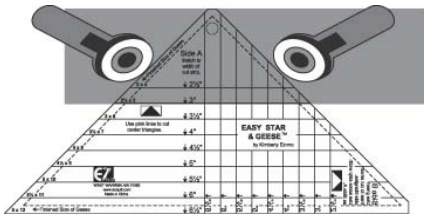

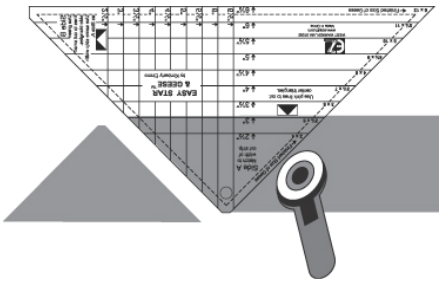

Side B

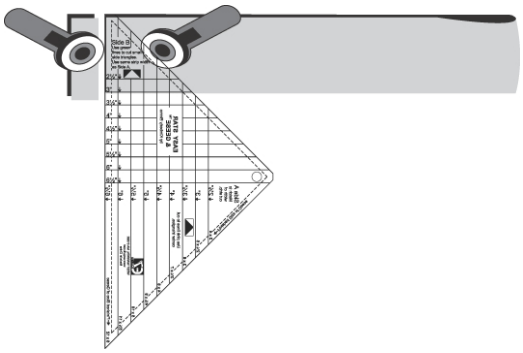

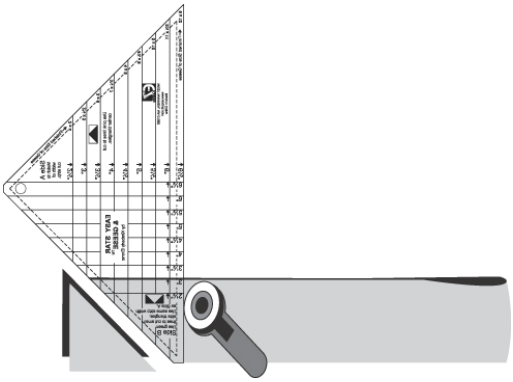

Flying Geese Assembly

Make Four

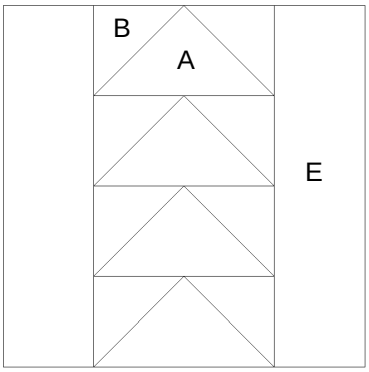

Flying Geese Blocks

1. Make flying geese units from fabric #2 wings (B units) and fabrics # 4, 5, 6 & 7 geese (A units). Make 4 of each color combination.
2. Sew the flying geese units to make strip units as shown.
3. Sew two fabric #3 E rectangles on both sides of flying geese strips.
4. Press seams toward flying geese.
5. Square up blocks if necessary.

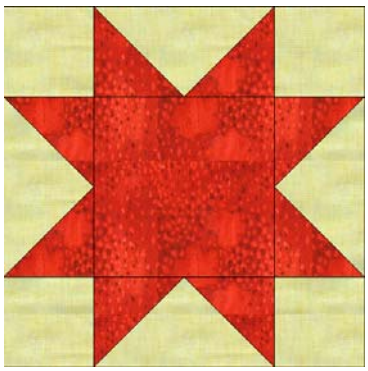

Make Five

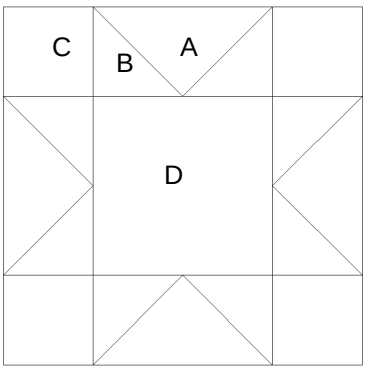

Sawtooth Star Blocks

6. Make flying geese units from fabric #2 wings (B units) and fabric #3 geese (A units). Make 20.
7. Add 3” fabric #3 C squares on both sides of 10 flying geese units.
8. Press seams toward squares.
9. Sew remaining 10 flying geese units on both sides of 5½” fabric #2 D squares.
10. Press seams toward squares.
11. Assemble blocks; make sure seams oppose at intersections and match points. Pin, if desired, at intersections.
12. Square up blocks if necessary.

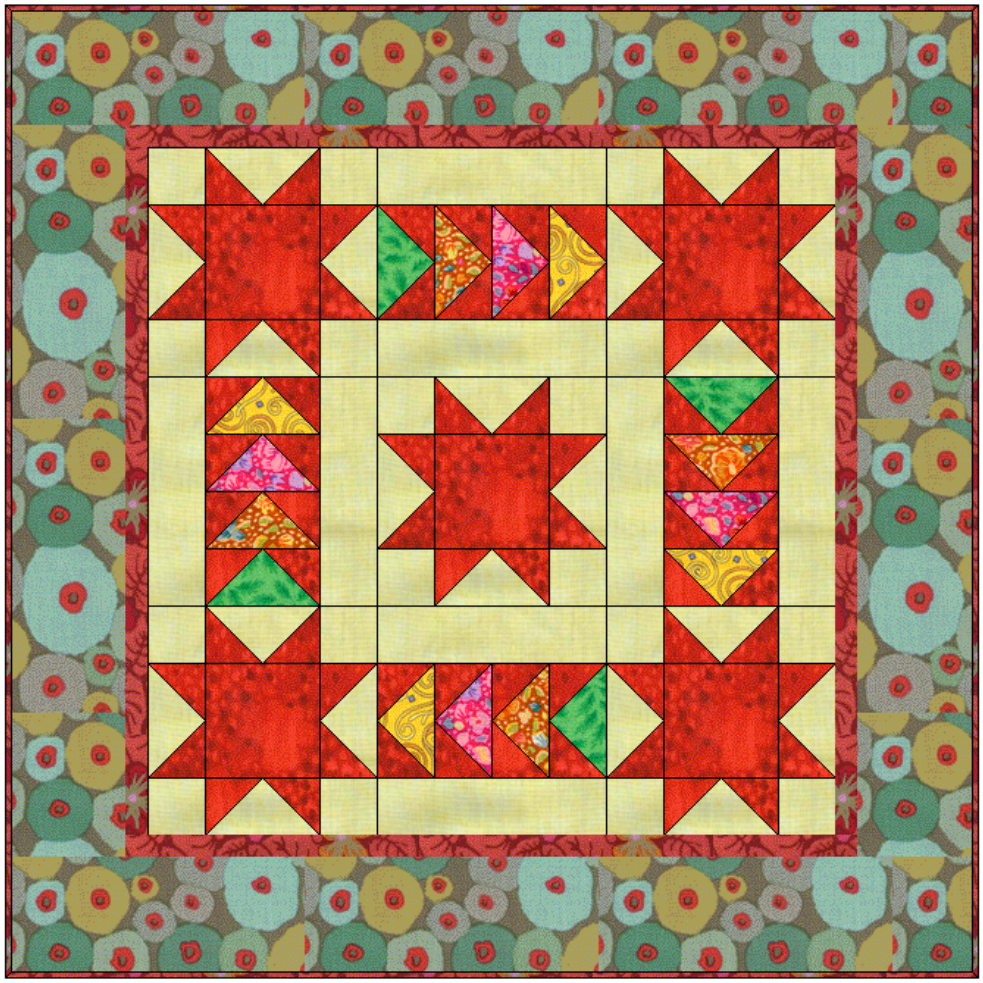

Quilt Assembly

13. Follow block layout diagram and carefully rotate blocks to complete quilt top as shown.
14. Add inner borders; then add outer borders.
15. Press border seams away from quilt center.
16. Layer batting and backing.
17. Quilt as desired.
18. Add binding by hand or machine.
19. Don’t forget to add a label and sign the back of your quilt in permanent ink.
20. Share and enjoy!